\Orchestrating a brighter world NEC

Automotive Linux Summit 2016

July 13-14, 2016, Tokyo, Japan

Automotive Ethernet – Rapid prototyping with open source projects

2016/07/13

NEC Communication Systems, Ltd.
New Technology Development Group

Stefan Aust (aust.st@ncos.nec.co.jp)

Manager

Orchestrating a brighter world

NEC brings together and integrates technology and expertise to create the ICT-enabled society of tomorrow.
We collaborate closely with partners and customers around the world, orchestrating each project to ensure all its parts are fine-tuned to local needs.

Every day, our innovative solutions for society contribute to greater safety, security, efficiency and equality, and enable people to live brighter lives.

Content

1. Self-introduction

Self-introduction

Stefan Aust

- Working for NEC Communication Systems since 2008.
- Expert in wireless communication, in particular Wi-Fi.
- Contributed to IEEE 802 standards.
- Working in the automotive field since 2014.
  - IEEE 802.1/.3 Automotive Ethernet standardization (PHY/MAC).
  - Audio Video Bridging (AVB) and Time-sensitive Network (TSN) PoC development.

2. Motivation

Why Automotive Ethernet?

Functional safety

New solutions for advanced in-vehicle systems are required.

Automotive networks: CAN, FlexRay, LIN, MOST, Ethernet

Power Train
- Engine control
- HEV/EV motor
- transmission

Networking
- CAN
- LIN
- FlexRay
- Ethernet
- AVB/TSN
- Bluetooth

Chassis
- Steering/EPS
- Brake/ABS
- Chassis control

IVI
- Car audio
- Connectivity
- Navigation
- Entertainment
- ITS/GPS

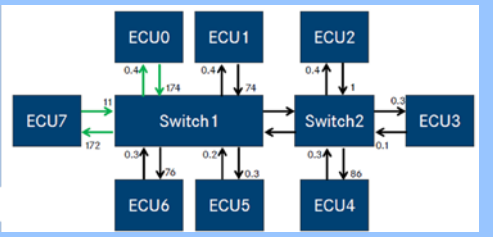

ECU Ethernet

Safety
- Airbag
- Safety control

ADAS
- Collision warning
- Parking assistant
- Back monitor
- Night vision

The vehicular target system

HU: Head Unit
RSE: Rear Seat Entertainment
IAM: Intelligent Antenna Module
GW: Gateway
DAS: Driver Assist System
TSR: Traffic Sign Recognition
Rview: Rear View
SVS: Surround View System
CAM: Camera

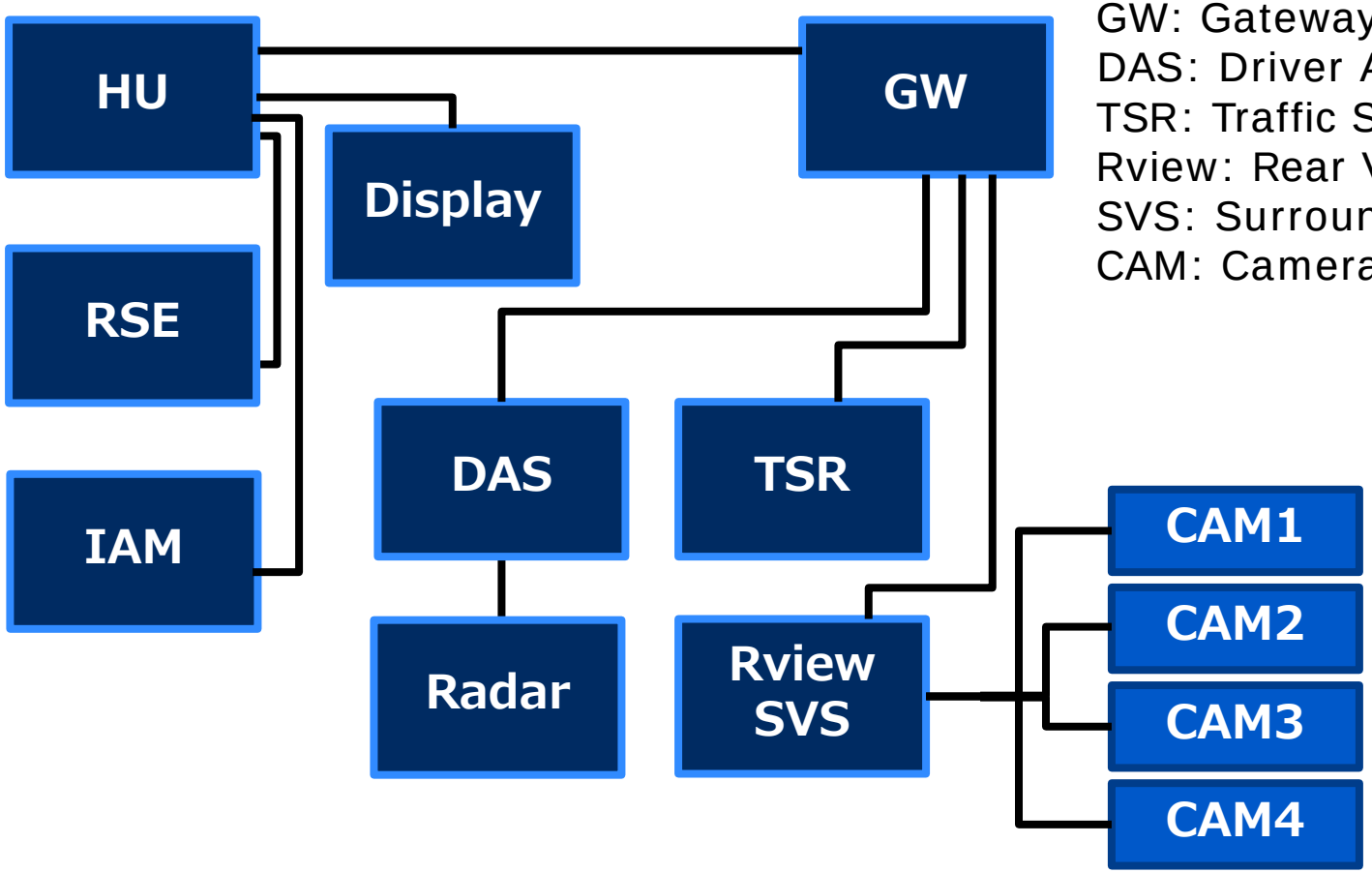

Trends in in-vehicle networks

Solution for increasing data traffic: Ethernet

- Both in and between application domains, data traffic will increase.
- For autonomous driving, increasing number of sensors and sensor resolution will affect to further increase of data traffic.

	2016		After 2020	
Application	Rate (bps)	Protocol	Rate (bps)	Protocol
Powertrain/Body/ Chassis	500K-10M	CAN FlexRay	1M-100M	CAN FD Ethernet AVB/TSN
ADAS (sensor)	500K-1M	CAN	1M-1G or more	CAN FD Ethernet AVB/TSN
Diagnosis	500K-1M	CAN	1M-1G or more	CAN FD Ethernet AVB/TSN
Camera/IVI	30M-3G	Analog LVDS	100M-1G or more	Ethernet AVB
Backbone	500K-10M	CAN	1G or more	Ethernet AVB/TSN

Alliances and Standardization Parties

- Promoting to introduce Ethernet in automotive systems globally.
- OABR 100Mbps, 1-pair twisted pair.
- Reduced Twisted Pair Giga-bit Ethernet (RTPGE) for automotive.

- Promoting AVB/TSN standardization in IEEE.
- Conformance & interoperability.
- Automotive profile.
- Software API.
- AAA2C (AVnu Automotive AVB Gen2 Council): Backbone & control.

- Promoting to introduce automotive Ethernet for Japanese automotive industry.
- Scope is from PHY/wire harness deployment to applications.

AUTOSAR and ISO are also preparing to handle with Ethernet.

IEEE 802.3 standardization (automotive related)

Standards overiview related to IEEE 802.3 activities

Task Force	Work Title Study Group	TF Name	Chair	Employer	Affiliation
P802.3bp	Reduced Twisted Pair Gigabit Ethernet (RTPGE)	1000BASE-T1	Steve Carlson	High Speed Design Inc.	Broadcom, Marvel, Bosch
P802.3br	Distinguished Minimum Latency Traffic in a Converged Traffic Environment (DMLT)	Interspersing Express Traffic (IET)	Ludwig Winkel	Siemens AG	Siemens AG
P802.3bu	1-Pair Power over Data Lines (PoDL)	1-Pair Power over Data Lines (PoDL)	Dave Dwelley	Linear Technology	Linear Technology
P802.3bv	Gigabit Ethernet Over Plastic Optical Fiber (GEPoF)	Gigabit Ethernet over Plastic Optical Fiber	Bob Grow	RMG Consulting	KDPOF
P802.3bw	1 Twisted Pair 100Mbps Ethernet (1TPCE)	100BASE-T1	Steve Carlson	Robert Bosch GmbH	Robert Bosch GmbH

What is AVB and TSN?

AVB stands for Audio Video Bridging

- Initial started based on the demand in audio/studio applications.

TSN stands for Time Sensitive Networking

- It is the name of the IEEE 802.1 Task Group responsible for the Data Link Layer.
- In TSN steams are delivered with guaranteed bandwidth and latency.

The initial AVB standard set includes:

- IEEE 802.1AS-2011 – gPTP (generic Precise Timing Protocol).
- IEEE 802.1Qav-2009 – Credit based shaper.
- IEEE 802.1Qat-2010 – SRP (Stream Reservation Protocol).
- IEEE 802.1BA-2011 – AVB systems (umbrella for all AVB standards).

Others

- IEEE 1722-2011 – AVTP (Audio Video Transport Protocol).
- IEEE 1722.1 – AVDECC (Audio Video Discover Enumeration Connection and Control).
- 802.1Qcah cyclic queuing and forwarding.
- 802.1Qbv scheduled traffic.
- 802.1Qbu preemption.
- 802.1Qcc stream reservation and configuration.
- 802.1Qci ingress filtering and policing.

Time sensitive networks

Why AVB and TSN?

- Legacy Ethernet uses "best effort delivery"—i.e., data traffic flow is indeterminate, and intervening traffic can delay a data stream. Because of this uncertainty on receiving a stream packet, the receivers in legacy systems typically employ large buffers so as not to underflow, which would result in a loss of critical control information in a control stream.

- AVB/TSN ensures the arrival of time-sensitive streams as well as when they will arrive. The FQTSS (Forwarding and Queuing of Time-Sensitive Streams) standard prioritizes AVB traffic ahead of legacy best-effort packets. AVB frames are forwarded with precedence over Best Effort traffic (i.e., reserved AVB stream traffic traversing an AVB bridge has forwarding precedence over non-reserved traffic) and will be subjected to traffic-shaping rules.

- AVB and TSN are enabling technologies for the connected car with flexible, scalable and secure in-vehicle networking solutions while addressing an increased need for highly reliable communication in the vehicle.

3. Open Source Projects (Automotive Ethernet)

AVB Open Source Projects

1. AVnu/Open-AVB

AVnu/Open-AVB contents (github project status: 6 months ago):

- Open AVB – an AVnu sponsored repository for Audio/Video Bridging technology
- https://github.com/AVnu/Open-AVB
- The Open AVB project is sponsored by the AVnu Alliance.
- Providing building blocks for AVB systems.
  - Drivers, libraries, example applications and daemon source code.
- Intel started the creation of the Open AVB repository to motivate a collaborative source code development.
- Licensing
  - Content is licensed under BSD licensing terms.
  - Linux kernel mode components are under GPLv2 license.
- Third party contributions are welcomed.
- Open AVB website: http://avnu.github.io/Open-AVB/
- Contains description to
  - gPTP
  - AVTP pipeline

AVB Open Source Projects

2. AVDECC

AVDECC contents (github project status: 8 months ago):

- A repository of AVDECC example open source code by J. Koftinoff.
- Project website: https://github.com/jdkoftinoff/jdksavdecc-c
- Enables remote configuration among AVB-related devices.

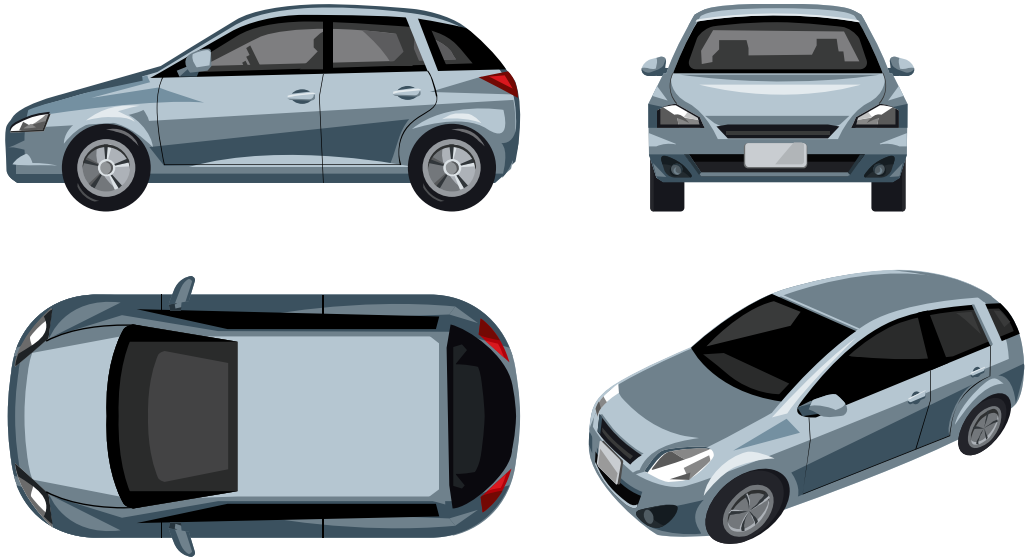

AVB Open Source Projects

3. AudioScience

AudioScience contents (github project status: 1 month ago):

- A repository for 1722.1 C++ controller libraries.
- Project website: https://github.com/audioscience/avdecc-lib
- AVB device enumeration, discover, and control.

AVB Open Source Projects

4. XMOS

XMOS contents (github project status: 3 years ago):

- A repository for AVB endpoint reference design in audio and automotive.
- Project website: https://github.com/xcore/sw_avb
- AVB endpoint source code is open source.

5. AGL code

AGL (project status: recent):

- A repository for multiple automotive features.
- Project website: https://www.automotivelinux.org/software
- AVBethernet building blocks available.
- Support of
  - multi-core ARM CPU
  - 3D graphics
  - Multi-media codecs
  - LAN/SATA/PCIe
  - BT/Wi-Fi/Radio Tuner
  - MOST, EthernetAVB

4. Rapid Prototyping (Automotive Ethernet)

Rapid prototyping (Automotive Ethernet)

AVB prototype

Requirements:

- Showcase for AVB and Automotive Ethernet functions.
- Simple and cost-efficient (no need for cutting-edge boards).

Why use of AVDECC:

- Simple source and make.
- Support of Arduino.
  - Selection of Arduino due to simple purchase and required HW features (Ethernet).
- Support of standard Ethernet (use of Ethernet hardware).

How to build up:

- Project website: https://github.com/jdkoftinoff/jdksavdecc-c
- Add test script (Ethernet addressing).
- Configuration of target platform (Arduino).
- Test and run the prototype.

How to use AVB open source (AVDECC project)

Hardware environment (recommended)

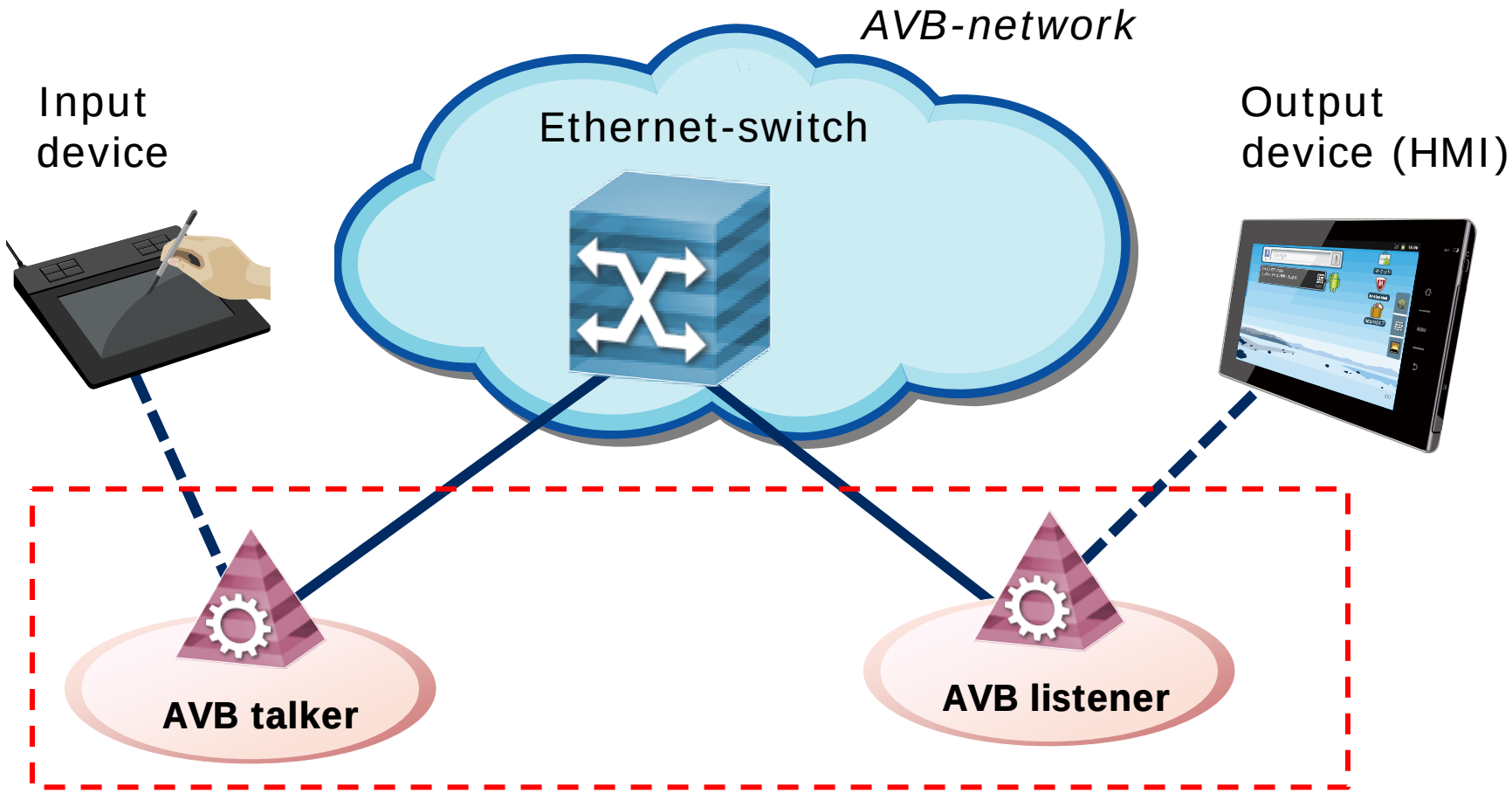

AVB prototyping with Arduino and AVDECC project

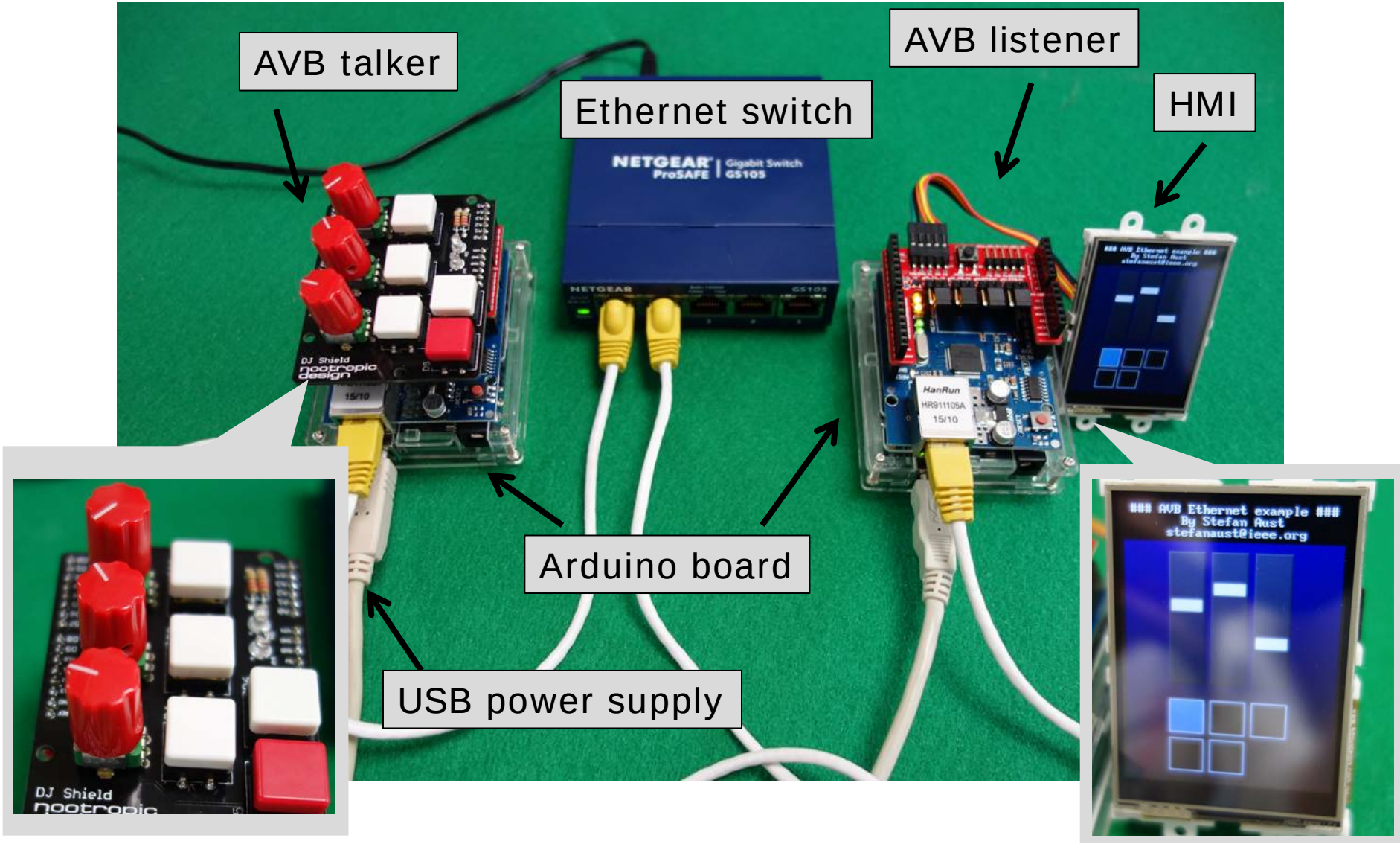

AVB prototype realization - Discussion

Software

- Smaller software projects (AVDECC) have valuable benefits compared to large open source projects (AVnu/Open-AVB).
- A strong dependency between open source and a target platform have been found disadvantageous (AVnu/Open-AVB, XMOS).

Hardware

- Some hardware platforms are difficult to purchase (price/version/availability).
- The availability of IoT (Internet of Things)-related hardware solutions provide a valuable solution. The Arduino series in combination with open source projects have been found as a good way to realize resource-efficient prototypes.

5. Conclusions

Conclusions

- There is an increased need for highly dependable, cross-domain communication in the vehicle.
  - Higher bandwidth demand due to new applications (e.g., 360-degree surround view).

- Automotive Ethernet aims to modernize and prepare the connected car with flexible, scalable and secure in-vehicle networking technology.
  - In AVB/TSN, the maximum latency is deterministic.

- Open source projects will help the adoption of Ethernet AVB/TSN in automotive markets.
  - The realization of an AVB prototype using open source as presented in this talk has shown the practicability.

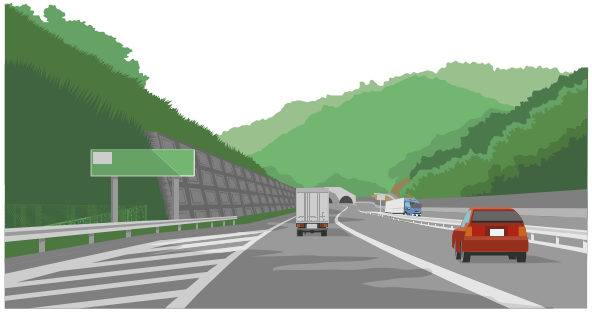

Thank you!

Questions & Answers

Orchestrating a brighter world

NEC